ISO 9001:2015 by L.R.
PED DIR. 2014/68/UE by L.R.
ATEX DIR. 2014/34/UE by B.V.
FIRE SAFE EXECUTION by L.R.
ISO 15848 by TÜV
ANTISTATIC DEVICE by L.R.
FIRE SAFE TESTED ISO 10497 by L.R.
EAC CERTIFICATION by B.V.

TYPE
RT7
PN 25 ÷ 63

NORME E DIRETTIVE APPLICATE DISPONIBILI AL SEGUENTE LINK:
STANDARD AND DIRECTIVE APPLIED AVAILABLE AT FOLLOWING LINK:
http://www.adlerspa.com/pdf/NORME_ADLER.pdf

VALVOLE A SFERA
"4 VIE" CON SFERA A X

ISO nbr° LRC 0160281 QMS issued by L.R.Q.A. PED nbr° COV 0212112/01 issued by L.R.V.
ATEX nbr° 40.2003.4392 issued by B.V. ISO 15848 nbr° I-148466/1-/2 issued by TÜV

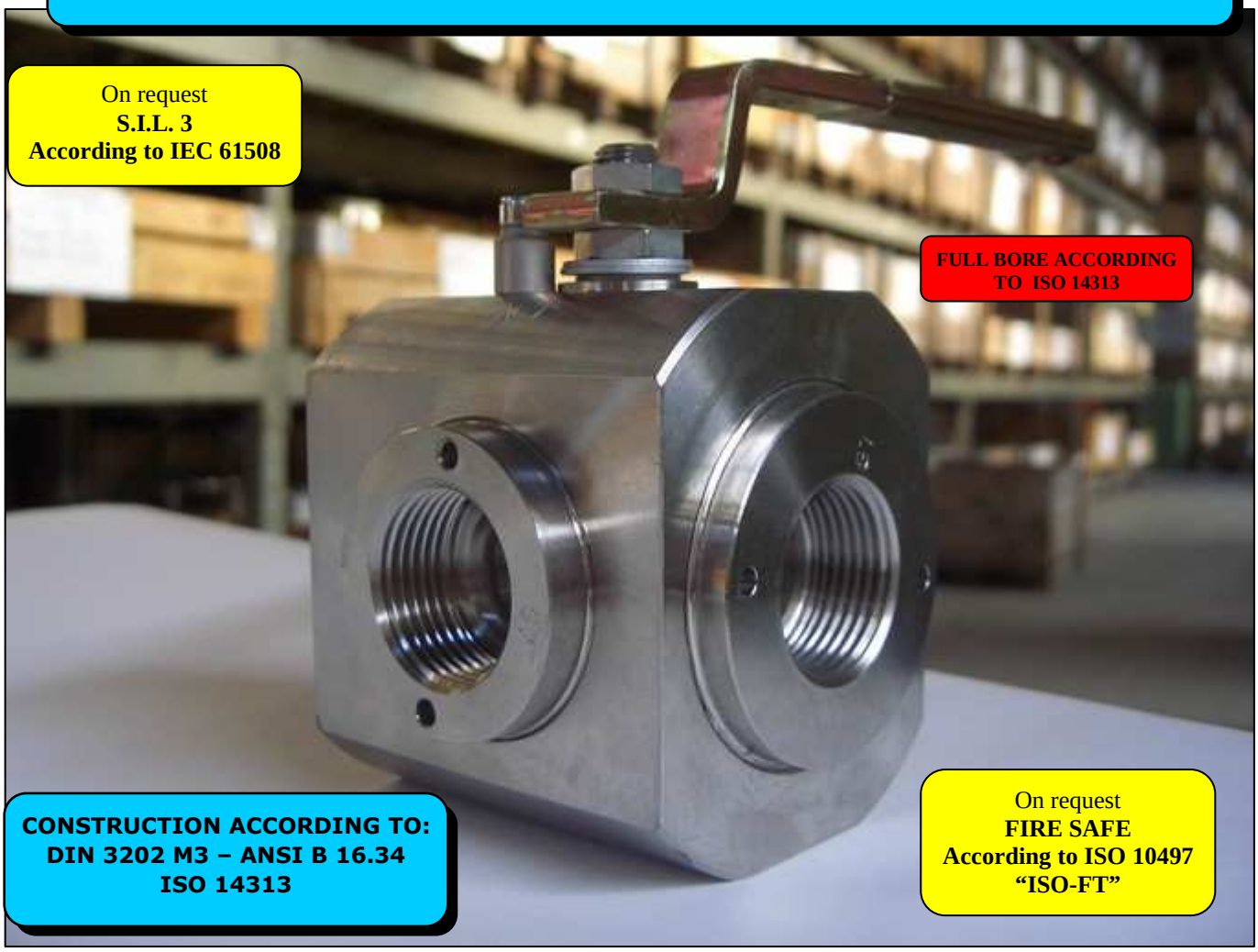

BALL VALVES "4 WAY" WITH X BALL
ROBINETS A BOISSEAU SPHERIQUE
"4 VOIES" AVEC BOULE A X

KUGELHÄHNE "4 WEGE" MIT X KUGEL

WEB SITE: WWW.ADLERSPA.COM

ADLER BALL VALVES RT7/19 RIPRODUZIONE VIETATA - COPYRIGHT

ISO 9001:2015 by L.R.
PED DIR. 2014/68/UE by L.R.
ATEX DIR. 2014/34/UE by B.V.
FIRE SAFE EXECUTION by L.R.
ISO 15848 by TÜV
ANTISTATIC DEVICE by L.R.
FIRE SAFE TESTED ISO 10497 by L.R.
EAC CERTIFICATION by B.V.

TYPE

RT7

PN 25 ÷ 63

VALVOLA A SFERA "4 VIE" CON SFERA A X
BALL VALVES "4 WAY" WITH X-BALL
ROBINETS A BOULE "4 VOIES" AVEC BOULE A X
KUGELHÄHNE "4 WEGE" MIT X-KUGEL

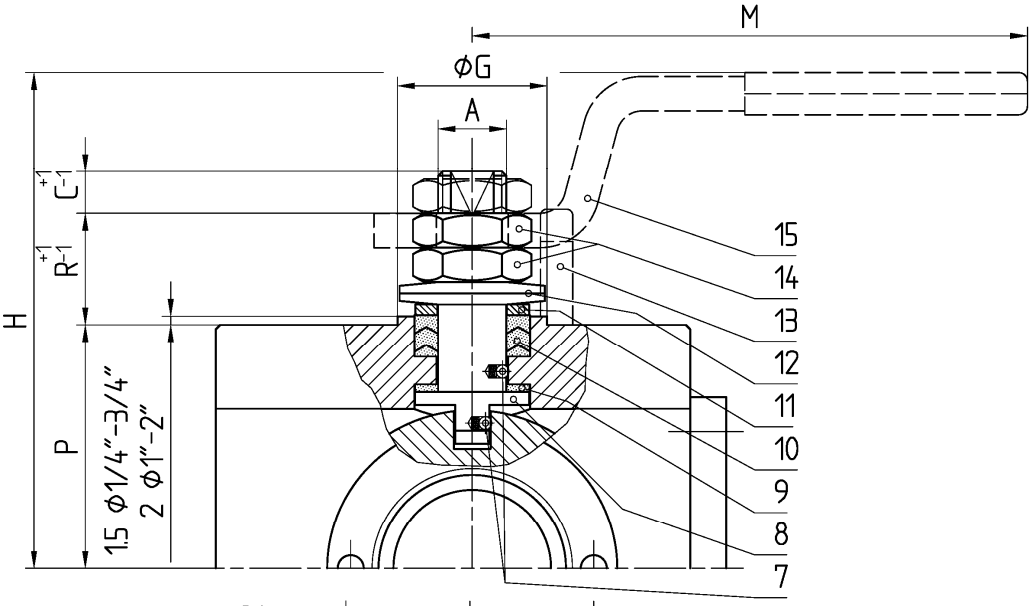

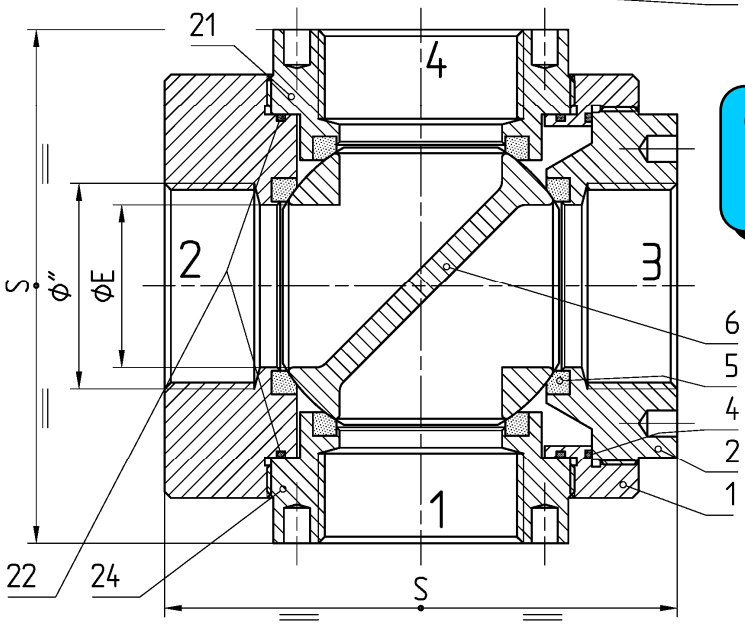

CONSTRUCTION ACCORDING TO:
DIN 3202 M3 - ANSI B16.34
ISO 14313

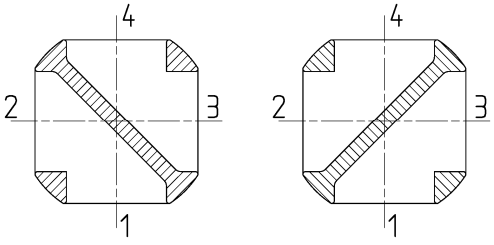

POSIZIONI OTTENIBILI
OBTAINABLE POSITIONS
POSITIONS OBTENIBLES
MÖGLICHE STELLUNGEN

- **ACCOPPIAMENTO VALVOLA ATTUATORE**
- **CONNECTION VALVE ACTUATOR**
- **ACCOUPLEMENT ROBINET-ACTIONNEUR**
- **ZUSAMMENBAU KUGELHAHN ANTRIEB**

ISO-5211

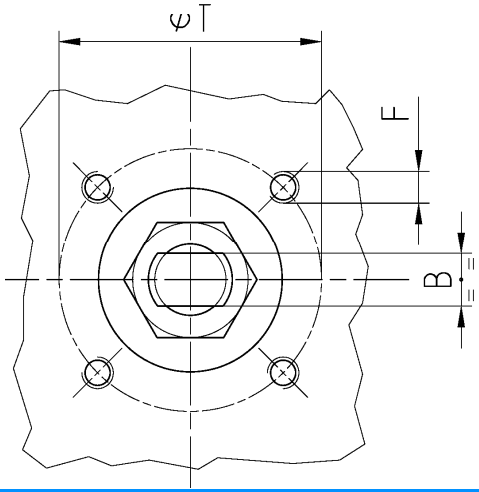

ADLER BALL VALVES RT7/19 RIPRODUZIONE VIETATA - COPYRIGHT

ISO 9001:2015 by L.R.
PED DIR. 2014/68/UE by L.R.
ATEX DIR. 2014/34/UE by B.V.
FIRE SAFE EXECUTION by L.R.
ISO 15848 by TÜV
ANTISTATIC DEVICE by L.R.
FIRE SAFE TESTED ISO 10497 by L.R.
EAC CERTIFICATION by B.V.

TYPE

RT7

PN 25 ÷ 63

N.	DESCRIZIONE DESCRIPTION DESCRIPTION BESCHREIBUG	MATERIALI MATERIALS MATERIAUX WERKSTOFFE
1	CORPO BODY CORPS MITTE	ASTM A105 ASTM A479 316/316L
2	GHIERA INSERT EMBOUT GEWINDEDRUCKRING	ASTM A105 ASTM A479 316/316L
3*	O-RING	FKM (VITON)
4*	ANELLO SEAL ANNEAU DICHTUNGSRING	P.T.F.E.
5*	SEDE SEAT SIEGE SITZRING	P.T.F.E. (BAM CERTIFIED) R.P.T.F.E. (OPTIONAL)
6	SFERA BALL BOULE KUGEL	ASTM A351 CF8 ASTM A351 CF8M
7	DISPOSITIVO ANTISTATICO ANTISTATIC DEVICE CONTACT ANTISTATIQUE ANTISTATIK VORRICHTUNG	ASTM A479 316/316L
8	STELO STEM TIGE SPINDEL	ASTM A479 304/304L ASTM A479 316/316L
9*	BUSSOLA STEM SEAL JOINT TIGE UNTERE SPINDELABDICHTUNG	P.T.F.E.
10*	PACCO A "V" CHEVRON RINGS JOINT A "V" 3 FACHE DACHMANSCHETTE	P.T.F.E. / GRAFITE P.T.F.E. / GRAPHITE P.T.F.E. / GRAPHITE P.T.F.E. / GRAPHIT

N.	DESCRIZIONE DESCRIPTION DESCRIPTION BESCHREIBUNG	MATERIALI MATERIALS MATERIAUX WERKSTOFFE	
11	PREMIBUSSOLA PRESSING BUSH PRESSE RONDELLE STOPFBUCHSDRUCKRING	ASTM A479 304	
12	MOLLE A TAZZA SPRING WASHERS RONDELLES BELLEVILLE TELLERFEDERN	C72/50Cr V_4 X5CrNi17.7 or X12CrNi17.7	ZINCATO – GALVANIZED ZINGUE – VERZINKT ON REQUEST
13	VITE DI FERMO E FERMO PIN AND STOP PIN PLOT ET PLOT D'ARRET ANSCHLAGBOLZEN	UNI 3740 8.8 UNI 3951 A2-70	ZINCATO – GALVANIZED ZINGUE – VERZINKT ON REQUEST
14	DADO – CONTRODADO NUT – LOCK NUT ECROU – CONTRE-ECROU MUTTER – KONTERMUTTER	UNI 3740 - 6S ASTM A479 304	ZINCATO – GALVANIZED ZINGUE – VERZINKT ON REQUEST
15	LEVA WRENCH LEVIER HANDHEBEL	AISI 1010 ASTM A479 304	ZINCATO/VERNICIATO GALVANIZED/PAINTED ZINGUE/PEINT VERZINKT/GEMALTEN ON REQUEST
21	GHIERA INSERT EMBOUT GEWINDEDRUCKRING	ASTM A105 ASTM A479 316/316L	
22*	ANELLO SEAL ANNEAU DICHTUNGSRING	P.T.F.E.	
23*	O-RING	FKM (VITON)	
24	GHIERA INSERT EMBOUT GEWINDEDRUCKRING	ASTM A105 ASTM A479 316/316L	

*** RICAMBI CONSIGLIATI – RECOMMENDED SPARE PARTS – PIECES DE RECHANGE CONSEILLEES – ERSATZTEIL EMPFEHLUNG**

DIMENSIONI – DIMENSION – DIMENSIONS – ABMESSUNGEN

Ø"	¼"	⅜"	½"	¾"	1"	1¼"	1½"	2"	2½"	3"	4"	5"	6"	8"
A	8	8	10	10	12	12	16	16						
B	5	5	6	6	8	8	10	10						
C	6	6	7	7	10	10	15	15						
ØE	10	10	15	19	25	30	38	51						
F	M5	M5	M5	M5	M5	M5	M6	M6						
ISO	F03	F03	F03	F03	F03	F03	F05	F05						
G	25	25	25	25	25	25	35	35						
H	50	50	70	74	90	97	113	123						
M	120	120	145	145	185	185	280	280						
P	21,5	21,5	30	34,5	46	51	57	67						
R	12	12	14	14	17	17	20	20						
S	60	60	75	80	90	110	120	140						
T	36	36	36	36	36	36	50	50						
PN	63	63	63	40	40	40	25	25						
~Kg	1,5	1,5	2,3	3,1	4,4	6,2	9,5	15	CARBON STEEL – STAINLESS / STEEL EXECUTION 17					
~Kg			2		4		8,8		STAINLESS STEEL / EXECUTION 18					

- DATI E CARATTERISTICHE SOGGETTI A VARIAZIONI SENZA PREAVVISO
- SPECIFICATIONS SUBJECT TO MODIFICATIONS WITHOUT PRIOR NOTICE
- TOUS DROITS DE MODIFICATION RESERVES
- KONSTRUKTIONSÄNDERUNGEN VORBEHALTEN

SEAT IN R.P.T.F.E.

ADLER SpA – BALL VALVES
20010 S. STEFANO TICINO (MI) ITALY V.le BORLETTI, 14 Tel. +39/02974842.11 FAX +39/0297271698
E-mail: adler@adlerspa.com http://www.adlerspa.com

ADLER BALL VALVES RT7/19 RIPRODUZIONE VIETATA - COPYRIGHT

ADLER SpA BALL VALVES ®

ISO 9001:2015 by L.R.
PED DIR. 2014/68/UE by L.R.
ATEX DIR. 2014/34/UE by B.V.
FIRE SAFE EXECUTION by L.R.
ISO 15848 by TÜV
ANTISTATIC DEVICE by L.R.
FIRE SAFE TESTED ISO 10497 by L.R.
EAC CERTIFICATION by B.V.

TYPE

RT7

PN 25 ÷ 63

· ESECUZIONI ▪ EXECUTIONS ▪ EXECUTIONS ▪ AUSFÜHRUNGEN



EXECUTION 4- 12



EXECUTION 6 - 16

S STANDARD **O** OPTIONAL

1 **S**

SEE TABLE 23 FOR TYPE OF THREAD

2 INDICATORE DI FLUSSO / FLOW INDICATOR **S**

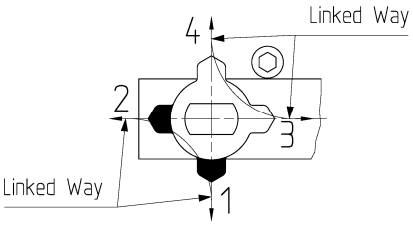

SEE OBTAINABLE POSITIONS ON DATASHEET

2 INDICATORE DI FLUSSO / FLOW INDICATOR **S**

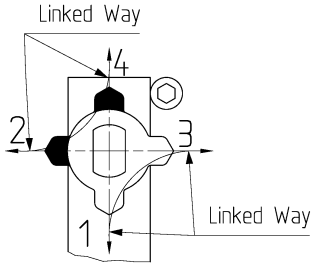

SEE OBTAINABLE POSITIONS ON DATASHEET

4 **S**

-STELO ANTI ESPULSIONE -ANTI BLOW OUT STEM
-TIGE ANTIEXPULSION -AUSBLASGESICHERTE WELLE

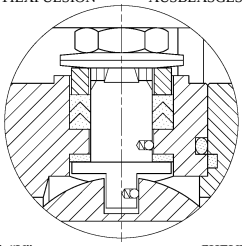

-PACCO A "V" -CHEVRON RINGS
-JOINT A "V" -3 FACHE DACHMANSCHETE
ANTISTATIC DEVICE ANTISTATIK VORRICHTUNG BS 5146

5 DN ¼" ÷ 1 ¼" **O**

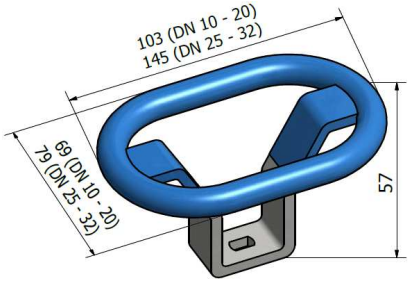

-MANIGLIA OVALE - OVAL HANDLE
-LEVIER OVAL –HANDHEBEL IN OVALFORM

6 **BREVETTO – PATENTED**
00219688 - 21-04-1993 **O**

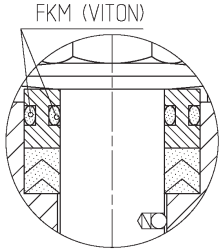

-"O" RING STELO "O" RING ON STEM
-TIGE AVEC "O" RING
-"O" RING IM SPINDELBEREICH

ADLER BALL VALVES RT7/19 RIPRODUZIONE VIETATA - COPYRIGHT

ADLER SpA BALL VALVES ®

ISO 9001:2015 by L.R.
PED DIR. 2014/68/UE by L.R.
ATEX DIR. 2014/34/UE by B.V.
FIRE SAFE EXECUTION by L.R.
ISO 15848 by TÜV
ANTISTATIC DEVICE by L.R.
FIRE SAFE TESTED ISO 10497 by L.R.
EAC CERTIFICATION by B.V.

TYPE

RT7

PN 25 ÷ 63

7 **O**

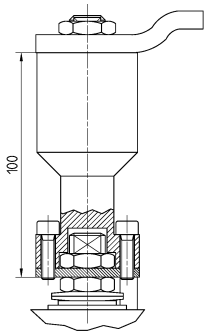

-PROLUNGA STELO -STEM EXTENSION
-TIGE PROLONGEE -SPINDELVERLÄNGERUNG

8 **O**

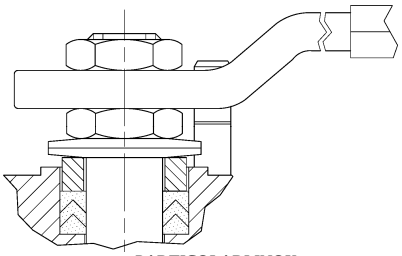

-PARTICOLARI INOX
-STAINLESS STEEL DETAILS
-ACCESSOIRES EN INOX
-EDELSTAHLTEILE

9 **S**

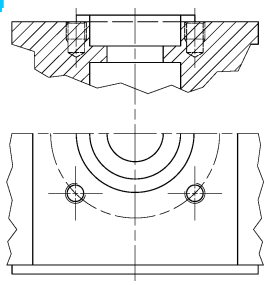

-ATTACCO "ISO" -"ISO" CONNECTIONS
-SYSTEM "ISO" -ANSCHLUSS "ISO"

10 **S**

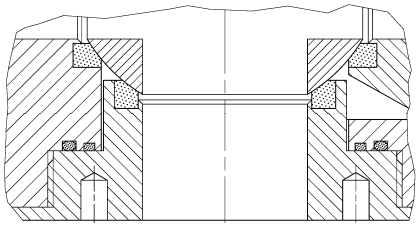

-SFERA CONTENUTA –CONTENTS BALL
- BOULE CONTENUE
-NICHT RAUSRAGENDE KUGEL

AQUILA – EAGLE – AIGLE
ADLER



12 **O**

FIRE SAFE
ISO 10497 "ISO-FT"
(BS 6755 / API 607)



13 **S**

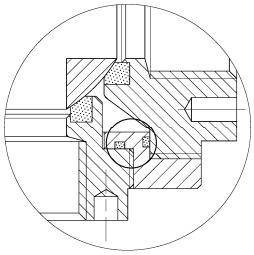

-ANELLO CONTENUTO –CONTAINED SEAL
-ANNEAU CONTENU -DICHTRING GEKAMMERT

-GHIERA A BATTUTA -METAL BEATING RING
-EMBOUT AVEC BATTUE MECANIQUE
-METALLISCHER ANSCHLAG DES GEWINDEDRUCKRINGS

THREAD GAUGES



15 **O**

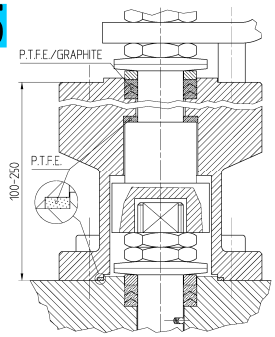

- SERVIZIO CRIOGENICO – CRYOGENIC SERVICE
- SERVICE CRYOGÉNIQUE
-TIEFTEMPERATUR SERVICE

DESIGN CHECK



17 **S**

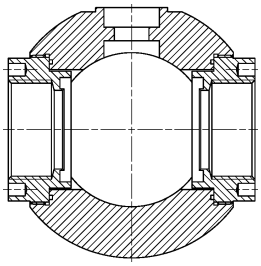

ADLER

UNA GAMMA COMPLETA
PRIVILEGIANDO LA QUALITA'

A COMPLETE RANGE PRIVILEGING
THE QUALITY

ADLER BALL VALVES RT7/19 RIPRODUZIONE VIETATA - COPYRIGHT

ISO 9001:2015 by L.R.
PED DIR. 2014/68/UE by L.R.
ATEX DIR. 2014/34/UE by B.V.
FIRE SAFE EXECUTION by L.R.
ISO 15848 by TÜV
ANTISTATIC DEVICE by L.R.
FIRE SAFE TESTED ISO 10497 by L.R.
EAC CERTIFICATION by B.V.

TYPE
RT7
PN 25 ÷ 63

CARATTERISTICHE DEL FILETTO - THREAD FEATURES - FILETAGE CARACTÉRISTIQUES - GEWINDE KENNDATEN

IN ACCORDANCE TO ISO 7-1 – 1994

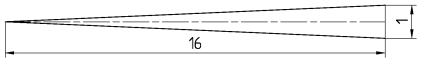

H= 0.960 237 P
h= 0.640 327 P
r= 0.137 278 P

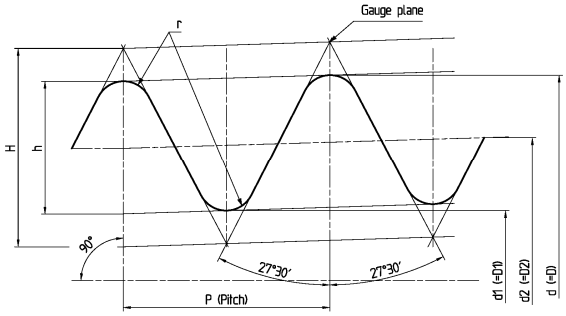

1	2	3	4	5	6	7	8	9	10	11	12	13	14	15	16	17	18	19	20
Designation of thread size	Number of threads in 25.4 mm	Pitch	Height of thread	Diameters of gauges plane			Gauges length (external threads)					Tolerance on position of gauge plan on internal thread		Length of useful external thread not less than			Fitting allowance		Diameter tolerance on parallel internal threads
				Major	Pitch	Minor	Nominal	Tolerance $\pm t_1/2$		Max.	Min.	Tolerance $\pm t_1/2$		For nominal gauge length	For maximum gauge length	For minimum gauge length			
		P	h	d	d_2	d_1		2)	Turns of thread			2)	Turns of thread				2)	Turns of thread	
¼	19	1,337	0,856	13,15	12,30	11,44	6	1,3	1	7,3	4,7	1,7	1 ¼	9,7	11	8,4	3,7	2 ¾	±0,104
3/8	19	1,337	0,856	16,66	15,80	14,95	6,4	1,3	1	7,7	5,1	1,7	1 ¼	10,1	11,4	8,8	3,7	2 ¾	±0,104
½	14	1,814	1,162	20,95	19,79	18,63	8,2	1,8	1	10	6,4	2,3	1 ¼	13,2	15	11,4	5	2 ¾	±0,142
¾	14	1,814	1,162	26,44	25,27	24,11	9,5	1,8	1	11,3	7,7	2,3	1 ¼	14,5	16,3	12,7	5	2 ¾	±0,142
1	11	2,309	1,479	33,24	31,77	30,29	10,4	2,3	1	12,7	8,1	2,9	1 ¼	16,8	19,1	14,5	6,4	2 ¾	±0,180
1 ¼	11	2,309	1,479	41,91	40,43	38,95	12,7	2,3	1	15	10,4	2,9	1 ¼	19,1	21,4	16,8	6,4	2 ¾	±0,180
1 ½	11	2,309	1,479	47,80	46,32	44,84	12,7	2,3	1	15	10,4	2,9	1 ¼	19,1	21,4	16,8	6,4	2 ¾	±0,180
2	11	2,309	1,479	59,61	58,13	56,65	15,9	2,3	1	18,2	13,6	2,9	1 ¼	23,4	25,7	21,1	7,5	3 ¼	±0,180

IN ACCORDANCE TO ANSI B1.20.1 – 1983

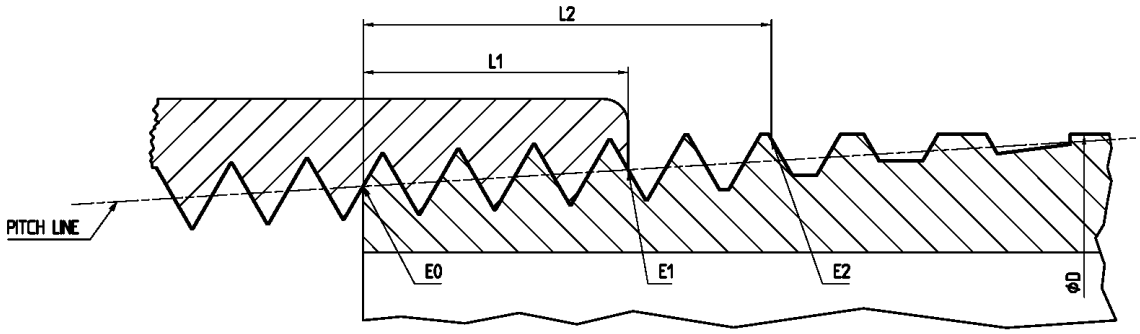

1	2	3	4	5	6	7	8	9	10	11
Nominal Pipe Size	O.D. of Pipe (*D*)	Threads/inch (*n*)	Pitch of threads (*P*)	Pitch diam. at beginning of external thread (E_0)	Handtight engagement			Effective thread, external		
					Length[2] (L_1)		Diam.[3] (E_1)	Length[4] (L_2)		Diam.[5] (E_2)
					inch	threads		inch	threads	
¼	0,540	18	0,05556	0,47739	0,2278	4,1	0,49163	0,4018	723	0,50250
3/8	0,675	18	0,05556	0,61201	0,240	4,32	0,32701	0,4078	734	0,63750
½	0,840	14	0,07143	0,75843	0,320	4,48	0,77843	0,5337	747	0,79179
¾	1,050	14	0,07143	0,96768	0,339	4,75	0,98887	0,5457	764	1,00179
1	1,315	11,5	0,0896	1,21363	0,400	4,6	1,23863	0,6828	785	1,25630
1 ¼	1,660	11,5	0,0896	1,55713	0,420	4,83	1,58338	0,7068	813	1,60130
1 ½	1,900	11,5	0,0896	1,79609	0,420	4,83	1,82237	0,7235	832	1,84130
2	2,375	11,5	0,0896	2,26902	0,436	5,01	2,29627	0,7565	870	2,31630

ADLER BALL VALVES RT7/19 RIPRODUZIONE VIETATA - COPYRIGHT